Autonics

ROTARY ENCODER (INCREMENTAL MANUAL HANDLE TYPE) ENH SERIES

INSTRUCTION MANUAL

CE

Thank you for choosing our Autonics product.
Please read the following safety considerations before use.

■ Safety Considerations

※Please observe all safety considerations for safe and proper product operation to avoid hazards.
※⚠ symbol represents caution due to special circumstances in which hazards may occur.

⚠ **Warning** Failure to follow these instructions may result in serious injury or death.
⚠ **Caution** Failure to follow these instructions may result in personal injury or product damage.

⚠ Warning

1. **Fail-safe device must be installed when using the unit with machinery that may cause serious injury or substantial economic loss. (e.g. nuclear power control, medical equipment, ships, vehicles, railways, aircraft, combustion apparatus, safety equipment, crime/disaster prevention devices, etc.)**
   Failure to follow this instruction may result in fire, personal injury, or economic loss.
2. **Install on a device panel to use.**
   Failure to follow this instruction may result in fire.
3. **Do not connect, repair, or inspect the unit while connected to a power source.**
   Failure to follow this instruction may result in fire.
4. **Check 'Connections' before wiring.**
   Failure to follow this instruction may result in fire.
5. **Do not disassemble or modify the unit.**
   Failure to follow this instruction may result in fire.

⚠ Caution

1. **Use the unit within the rated specifications.**
   Failure to follow this instruction may result in fire or product damage.
2. **Do not short the load.**
   Failure to follow this instruction may result in product damage by fire.
3. **Do not use the unit in the place where flammable/explosive/corrosive gas, humidity, direct sunlight, radiant heat, vibration, impact, or salinity may be present.**
   Failure to follow this instruction may result in fire or explosion.
4. **Do not use the unit near the place where there is the equipment which generates strong magnetic force or high frequency noise and strong alkaline, strong acidic exists.**
   Failure to follow this instruction may result in product damage.

■ Ordering Information

ENH – 100 – 1 – T – 24

Series	Pulses/revolution	Clickstopper position	Control output	Power supply
Handle type	25, 100	1: Normal "H" 2: Normal "L"	T: Totem pole output V: Voltage output L: Line driver output	5: 5VDC ±5% 24: 12-24VDC ±5%

※The power of Line driver is only for 5VDC.

■ Dimensions

(unit: mm)

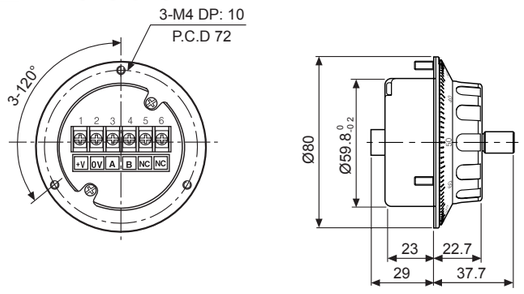

※Ø70mm PCD mounting hole type is customizable.

※Fix the unit by a wrench under 0.15 N·m of torque.

※The above specifications are subject to change and some models may be discontinued without notice.
※Be sure to follow cautions written in the instruction manual, and the technical descriptions (catalog, homepage).

■ Specifications

Item			Manual Handle Type Incremental Rotary Encoder
Model	Totem pole output		**ENH-□-□-T-□**
	Voltage output		**ENH-□-□-V-□**
	Line driver output		**ENH-□-□-L-□**
Resolution (PPR)※1			25,100
Electrical specification	Output phase		A, B phase (line driver output A, $\bar{A}$, B, $\bar{B}$ phase)
	Phase difference of output		Phase difference between A and B: $\frac{T}{4} \pm \frac{T}{8}$ (T= 1 cycle of A phase)
	Control output	Totem pole output	• [Low] - Load current: max. 30mA, Residual voltage: max. 0.4VDC⎓ • [High] - Load current: max. 10mA Output voltage (power voltage 5VDC⎓): min. (power voltage-2.0)VDC⎓, Output voltage (power voltage 12-24VDC⎓): min. (power voltage-3.0) VDC⎓
		Voltage output	Load current: max. 10mA, Residual voltage: max. 0.4VDC⎓
		Line driver output	• [Low] - Load current: max. 20mA, Residual voltage: max. 0.5VDC⎓ • [High] - Load current: max. -20mA, Output voltage: min. 2.5VDC⎓
	Response time (rise/fall)	Totem pole output	Max. 1μs (cable length: 1m, I sink = 20mA)
		Voltage output	
		Line driver output	Max. 0.2μs (cable length: 1m, I sink = 20mA)
	Power supply	Totem pole output	• 5VDC⎓ ±5% (ripple P-P: max.5%) • 12-24VDC⎓ ±5% (ripple P-P: max.5%)
		Voltage output	
		Line driver output	5VDC⎓ ±5% (ripple P-P: max.5%)
	Current consumption		Max. 40mA (disconnection of the load), Line driver output: max. 50mA (disconnection of the load)
	Max. response frequency		10kHz
	Insulation resistance		Over 100MΩ (at 500VDC megger between all terminals and case)
	Dielectric strength		750VAC 50/60Hz for 1 minute (between all terminals and case)
	Connec ion		Terminal block type
Mechanical specification	Starting torque		Max. 1kgf cm (0.098N·m)
	Shaft loading		Radial: max. 2kgf, Thrust: max. 1kgf
	Max. allowable revolution※2		Max. 200rpm (normal), 600rpm (peak)
Vibration			1.5mm amplitude at frequency of 10 to 55Hz (for 1 min) in each X, Y, Z direc ion for 2 hours
Shock			Approx. max. 50G
Environment	Ambient temperature		-10 to 70℃, storage: -25 to 85℃
	Ambient humidity		35 to 85%RH, storage: 35 to 90℃
Protection structure			IP50 (IEC standard)
Approval			CE (except for line driver output)
Weight※3			Approx. 330g (approx. 260g)

※1: Not indicated resolutions are customizable.
※2: Make sure that max. response revolution should be lower than or equal to max. allowable revolution when selecting the resolution.

$$\text{[Max. response revolution (rpm)]} = \frac{\text{Max. response frequency}}{\text{Resolution}} \times 60\ \text{sec}]$$

※3: The weight includes packaging. The weight in parenthesis is for unit only.
※Environment resistance is rated at no freezing or condensation.

■ Control Output Diagram

Totem pole output		Voltage output		Line driver output	
Rotary encoder circuit	Load connection	Rotary encoder circuit	Load connection	Rotary encoder circuit	Load connection

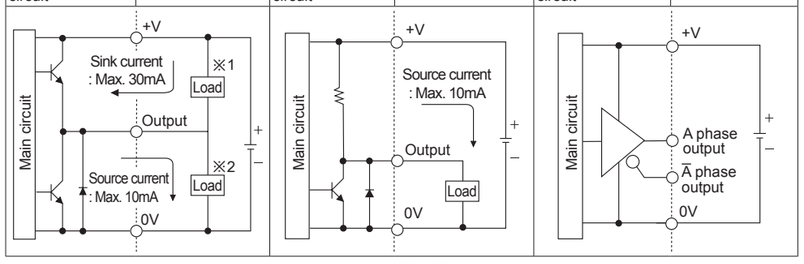

※The output circuits for A, B phase (line driver output is A, $\bar{A}$, B, $\bar{B}$ phase) are same.
※Totem pole output can be used for NPN open collector type (※1) or voltage output type (※2).

■ Connections

● Totem pole output / Voltage output

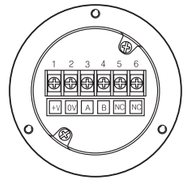

● Line driver output

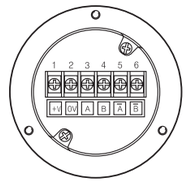

※Do not use terminal No. 5, 6.

■ Output Waveform

ENH-□-1-T-5, 24 ENH-□-1-V-5, 24	ENH-□-2-T-5, 24 ENH-□-2-V-5, 24	ENH-□-1-L-5	ENH-□-2-L-5

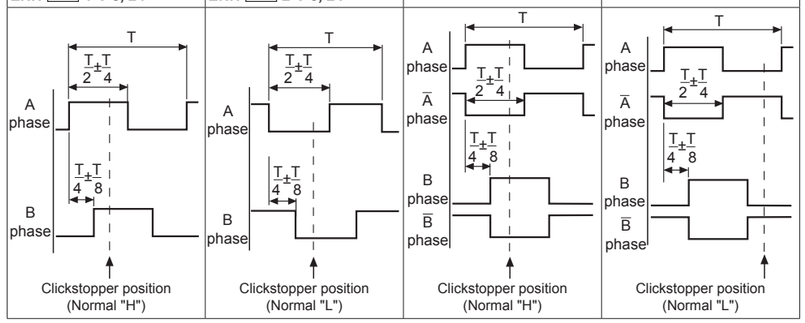

※Clickstopper position Normal "H" or Normal "L": It shows the waveform when the handle is stopped.

■ Cautions during Use

1. Follow instructions in 'Cautions during Use'. Otherwise, It may cause unexpected accidents.
2. 5VDC, 12-24VDC power supply should be insulated and limited voltage/current or Class 2, SELV power supply device.
3. For using the unit with the equipment which generates noise (switching regulator, inverter, servo motor, etc.), ground the shield wire to the F.G. terminal.
4. Ground the shield wire to the F.G. terminal.
5. When using switching mode power supply, frame ground (F.G.) terminal of power supply should be grounded.
6. Wire as short as poss ble and keep away from high voltage lines or power lines, to prevent inductive noise.
7. For Line driver unit, use the twisted pair wire which is attached seal and use the receiver for RS-422A communication.
8. Check the wire type and response frequency when extending wire because of distortion of waveform or residual voltage increment etc by line resistance or capacity between lines.
9. This unit may be used in the following environments.
   ①Indoors (in the environment condition rated in 'Specifications')
   ②Altitude max. 2,000m
   ③Pollution degree 2
   ④Installation category II

■ Major Products

- Photoelectric Sensors
- Fiber Optic Sensors
- Door Sensors
- Door Side Sensors
- Area Sensors
- Proximity Sensors
- Pressure Sensors
- Rotary Encoders
- Connector/Sockets
- Switching Mode Power Supplies
- Control Switches/Lamps/Buzzers
- I/O Terminal Blocks & Cables
- Stepper Motors/Drivers/Motion Controllers
- Graphic/Logic Panels
- Field Network Devices
- Laser Marking System (Fiber, CO_2, Nd: YAG)
- Laser Welding/Cutting System
- Temperature Controllers
- Temperature/Humidity Transducers
- SSRs/Power Controllers
- Counters
- Timers
- Panel Meters
- Tachometer/Pulse (Rate) Meters
- Display Units
- Sensor Controllers